PANTHER-M

Large-Format Linear Line Array Loudspeaker

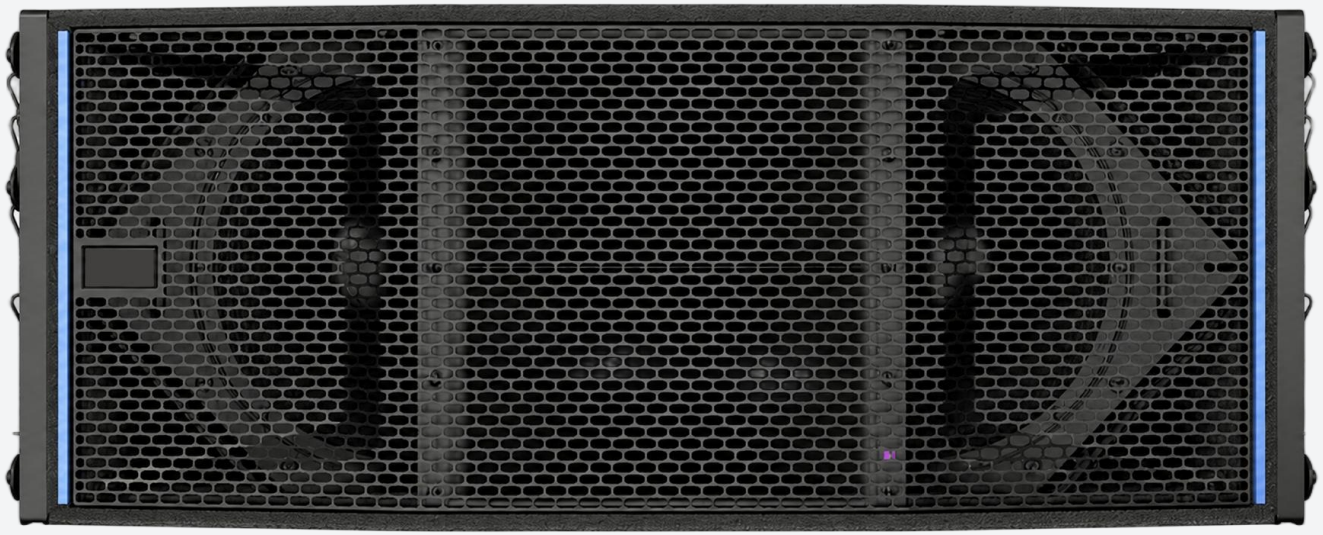

150.5 dB

Maximum sound level · burst noise

55 Hz–16 kHz

Operating frequency range

95° horizontal

Variant-specific coverage

Official product detail · English specifications

Product Positioning

Festival-scale output.
Modern touring efficiency.

PANTHER-M combines a 150.5 dB maximum sound level with a 150 lb self-powered cabinet and 95° horizontal coverage for large-format reinforcement.

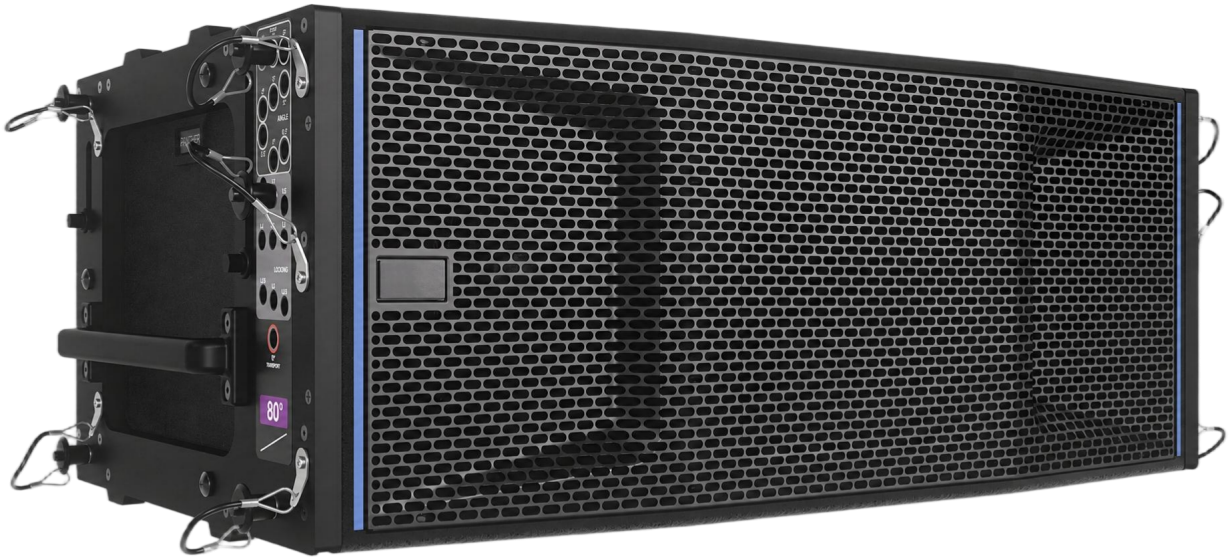

Applications

Festivals · arenas · stadiums · theatres · large performance venues · corporate productions

Core value

High output, reduced transport mass, lower power draw, Milan AVB connectivity and weather-ready deployment.

VARIANT ROLE

Medium-wide 95° coverage supports broad audience areas and transition zones.

Key Performance

150.5 dB

Maximum sound level

55 Hz–16 kHz

Operating frequency range

95°

Horizontal coverage

150 lb / 68 kg

Net weight

IP55

With Neutrik TOP cabling

2200 W

Burst power consumption

AES75 MAXIMUM LINEAR SOUND LEVELS

126.5 dBZ · 144 dBZpk · 125 dBA

Measured at 50 °C with RMS input level +6.8 dBV.

Acoustic & Enclosure Design

Low frequency

Two 12-inch long-excursion cone drivers; 4 Ω nominal impedance.

High frequency

Two 3-inch diaphragm compression drivers coupled to a computationally optimized horn; 8 Ω nominal impedance.

Directional design

Unique low-mid placement and optimized horn maintain controlled directivity across the operating range.

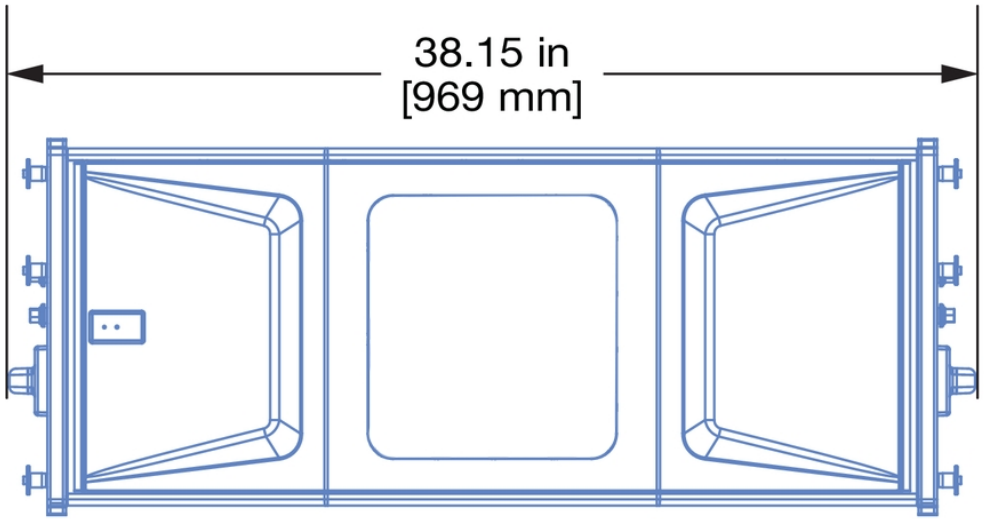

ENCLOSURE

Premium multi-ply birch · slightly textured black finish · stamped steel grille · UV-resistant, IP55 weather-ready construction.

Technical Specifications

PARAMETER	OFFICIAL SPECIFICATION
Product Model	PANTHER-M
Type	Large-format linear line array loudspeaker
Drivers	2 × 12 in LF; 2 × 3 in diaphragm HF compression drivers
Frequency Response	Not specified in official materials; operating range 55 Hz–16 kHz
Rated Power	Not specified in official materials
Peak Power	Not specified; burst power consumption: 2200 W
Sensitivity	Not specified in official materials
Maximum SPL	150.5 dB maximum sound level; AES75 values listed separately
Nominal Impedance	LF: 4 Ω; HF: 8 Ω
Coverage / Dispersion	95° horizontal; vertical depends on array configuration

PARAMETER	OFFICIAL SPECIFICATION
Enclosure	Premium multi-ply birch
Finish	Slightly textured black
Protective Grille	Powder-coated stamped steel
Connectors	XLR 3-pin TOP in/loop; etherCON TOP AVB; powerCON TRUE1 TOP
Dimensions	W 38.15 × H 14.85 × D 22.25 in (969 × 377 × 565 mm)
Weight	150 lb (68 kg)
Supplied Fittings	Captive GuideALinks, quick-release pins, detachable side handles
Recommended Amplifier	Self-powered; no external amplifier required
AC Power	200–240 V AC, 50/60 Hz; 1100 W max long-term
Ingress Protection	IP55 with properly terminated Neutrik TOP cables

System Application / Rigging

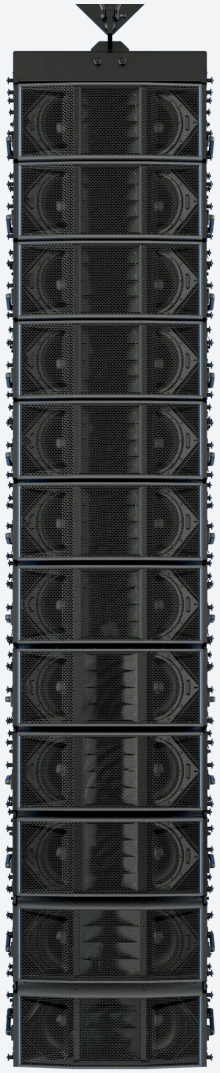

MG-PANTHER GRID KIT

Top grid for flying PANTHER arrays with single- or multi-point suspension.

MVP MOTOR V PLATE

Connects two motors to a single grid or loudspeaker rigging point.

Captive GuideALinks and quick-release pins provide 0.5°–9° inter-cabinet splay angles. All configurations must follow official load limits and MAPP 3D verification.

Deployment Options

SINGLE CABINET

95° horizontal pattern for compact fills or distributed reinforcement.

FLOWN ARRAY

Curved arrays tailor vertical coverage through 0.5°–9° inter-cabinet splay angles.

FOUR+ ELEMENT ARRAY

Arrays of four or more functionally create a cardioid low-frequency polar pattern.

MAPP System Design Tool provides official prediction of coverage and SPL for project-specific array configurations.

Technical Drawing / Dimensions

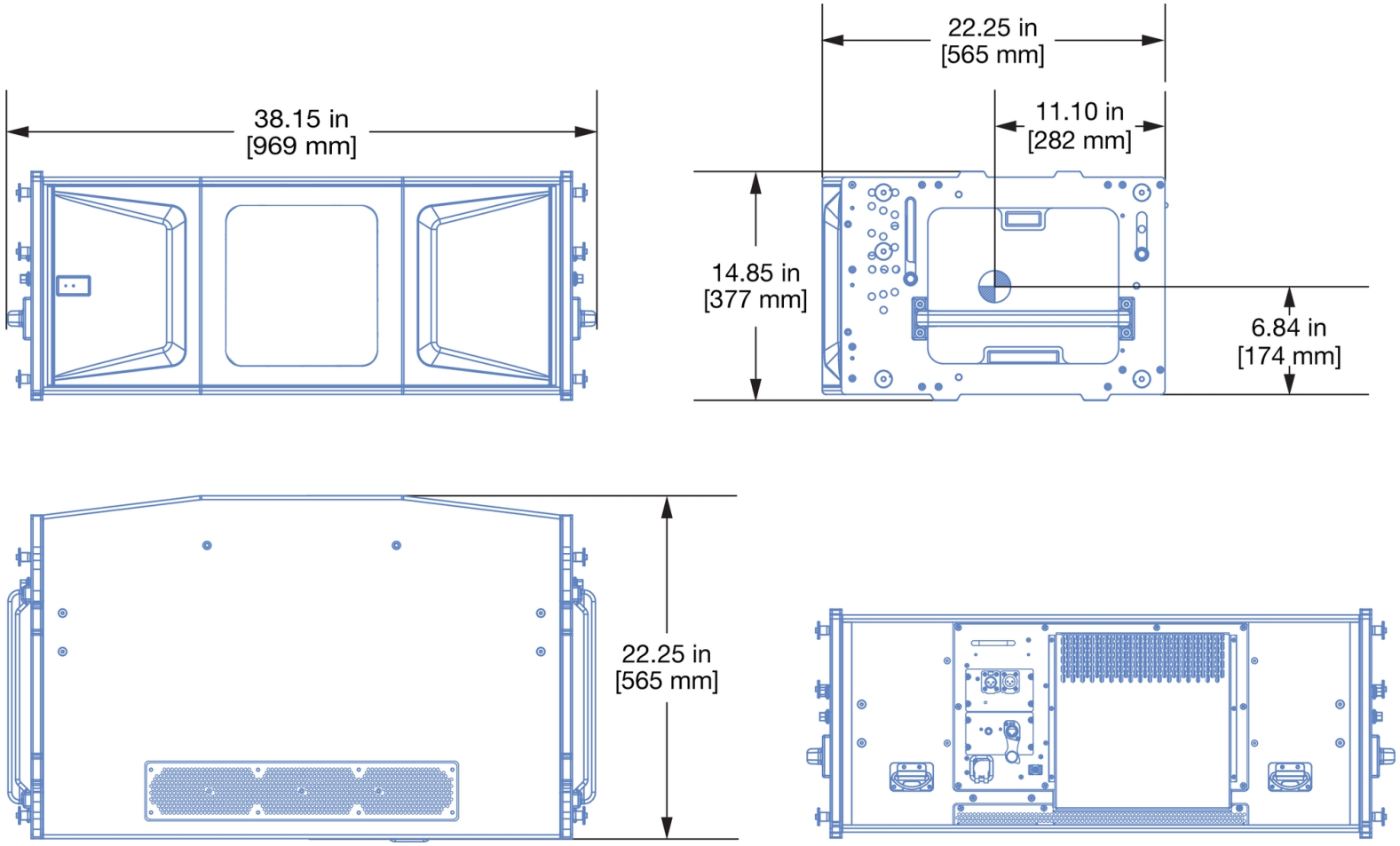

W 38.15 in (969 mm) · H 14.85 in (377 mm) · D 22.25 in (565 mm) · Weight 150 lb (68 kg)

Connections & Hardware Details

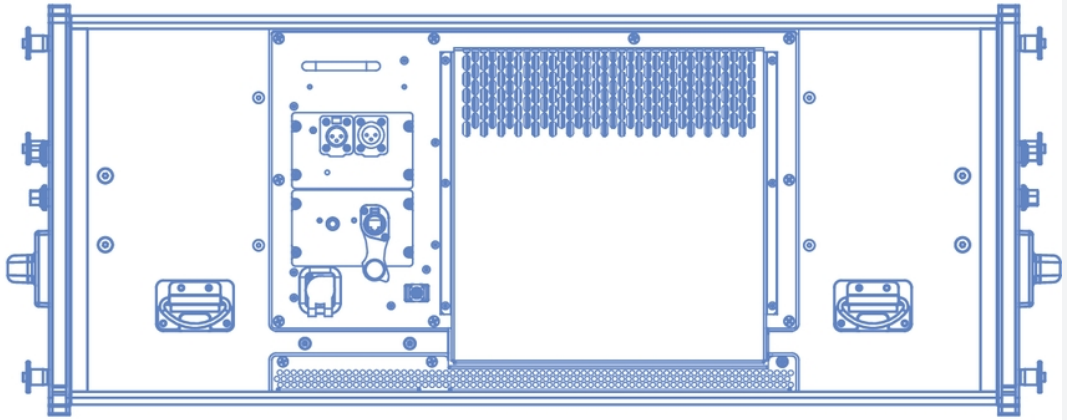

Analog audio

Neutrik XLR 3-pin TOP female input with male loop output; source capable of +24 dBu into 50 Ω for maximum peak SPL.

Digital audio

Neutrik etherCON TOP; AVB digital format; Milan Certified endpoint with loudspeaker telemetry.

Power

Neutrik powerCON TRUE1 TOP; 200–240 V AC, 50/60 Hz. Maximum long-term consumption 1100 W.

Hardware: captive GuideALinks · 0.5°–9° splay · detachable side handles · IP55 with TOP connectors

Accessories

MCF-PANTHER

Caster frame; transports up to four cabinets

MG-PANTHER

Top grid for flying PANTHER arrays

MVP MOTOR V PLATE

Two-motor connection to one grid point

4-HIGH COVER

Pullover cover for four PANTHER cabinets

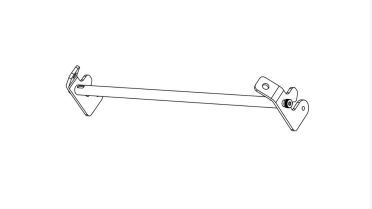

PBF-LYON

Pull-back bar for additional array downtilt

PANTHER shares the LYON footprint and is compatible with selected LYON accessories; follow current official documentation for load and configuration limits.

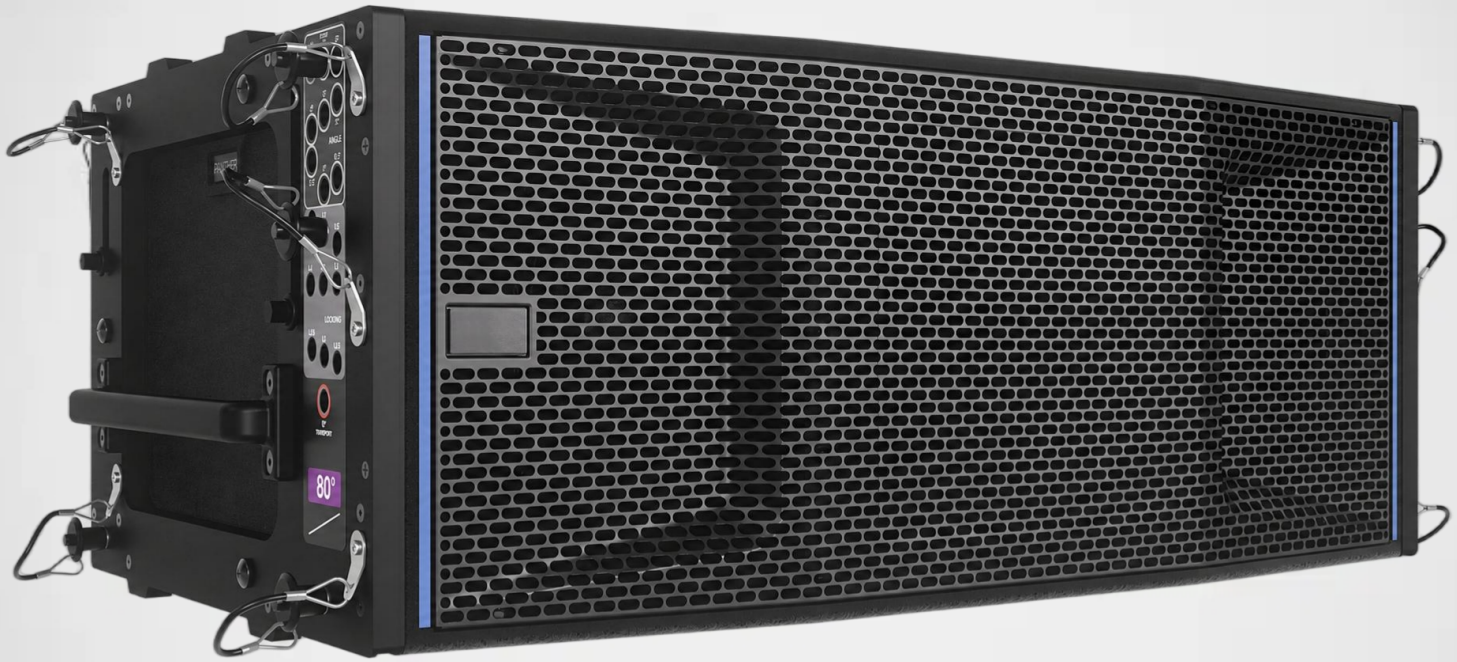

Application Scenarios

- Festivals
- Arenas & stadiums
- Theatres
- Large performance venues
- Corporate productions

Scenario categories reflect official product positioning; imagery illustrates product orientation and is not presented as a named installation.

PANTHER-M

Large-format self-powered line array loudspeaker

150.5 dB

Maximum sound level

55 Hz–16 kHz

Operating range

95°

Horizontal coverage

150 lb / 68 kg

Weight

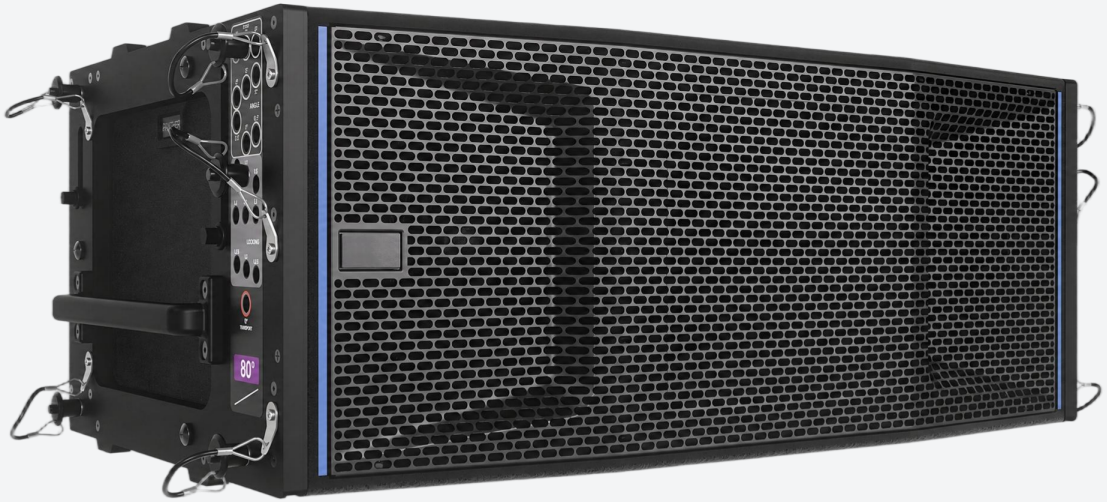

CONTACT / SALES INFORMATION

Company · Contact · Phone · Email · Website