A10 Wide-A210W

Medium Throw Concert Loudspeaker

2-Way Passive / Single 10" LF / Wide 30 deg enclosure

Clean system detail page for professional sound reinforcement.

137 dB

Maximum SPL

67 Hz - 20 kHz

Usable bandwidth

70 / 90 / 110 deg

Horizontal coverage options

A10 Wide

Medium-throw 2-way passive enclosure for demanding production applications.

Designed for flown or stacked vertical arrays, while remaining practical for individual front-fill and delay use.

The system combines high output, scalable horizontal coverage and a compact cabinet footprint for flexible deployment.

POSITIONING

Wide-angle medium-throw coverage in a lightweight 10-inch constant-curvature enclosure.

APPLICATIONS

Theatres, clubs, houses of worship, sports venues and distributed reinforcement.

VALUE

Broad coverage and flexible deployment with a compact 20 kg cabinet.

A10 Wide

137 dB
Maximum SPL

67 Hz - 20 kHz
Usable bandwidth (-10 dB)

8 ohms
Nominal impedance

20 kg / 44 lb
Net weight

30 deg
Vertical enclosure coverage

The enclosure is built for projection and pattern control in medium-throw systems.

Horizontal coverage can be configured for 70 degrees, 90 degrees asymmetric or 110 degrees symmetric deployment.

The 8-ohm passive design is intended for use with a compatible amplified controller.

A10 Wide

Coverage options: 70 degrees / 90 degrees asymmetric / 110 degrees symmetric

LOW FREQUENCY

1 x 10" neodymium cone driver with bass-reflex venting.

HIGH FREQUENCY

1 x 2.5" diaphragm neodymium compression driver.

COVERAGE

30 degrees enclosure coverage with selectable horizontal control.

SYSTEM ROLE

Wide medium-throw coverage for arrays, fills and delay positions.

A10 Wide

CABINET

Premium grade Baltic beech and birch plywood.

FRONT

Coated steel grille with acoustically neutral 3D fabric.

RIGGING

Flush-fitting two-point rigging system with 1 handle, 8 corner stops and 2 ground runners.

COMPONENTS

High grade steel rigging with anti-corrosion coating.

FINISH / RATING

Dark grey brown 426 C finish with IP55 protection rating.

A10 Wide

Product Model	A10 Wide
Type	Medium throw concert loudspeaker, 2-way passive
Description	Constant-curvature line source, 30 degrees vertical enclosure
Usable Bandwidth (-10 dB)	67 Hz - 20 kHz
Maximum SPL	137 dB
Nominal Directivity	Enclosure: 30 degrees; horizontal coverage: 70 degrees / 110 degrees symmetric or 90 degrees asymmetric
Transducers	LF: 1 x 10" neodymium cone driver; HF: 1 x 2.5" neodymium diaphragm compression driver
Acoustical Load	LF: bass-reflex venting; HF: waveguide with adjustable directivity
Nominal Impedance	8 ohms
Connectors	2 x 4-point speaker connectors
Rigging and Handling	Flush-fitting two-point rigging system; 1 handle, 8 corner stops and 2 ground runners
Safety	1 DIN580-compatible M8 insert
Dimensions	581 mm (22.9 in) / 347 mm (13.7 in) / 367 mm (14.5 in)
Weight (net)	20 kg / 44 lb
Cabinet	Premium grade Baltic beech and birch plywood
Front	Coated steel grille; acoustically neutral 3D fabric
Rigging Components	High grade steel with anti-corrosion coating
Finish	Dark grey brown 426 C
Protection Rating	IP55
Recommended Amplifier	Compatible amplified controller

A10 Wide

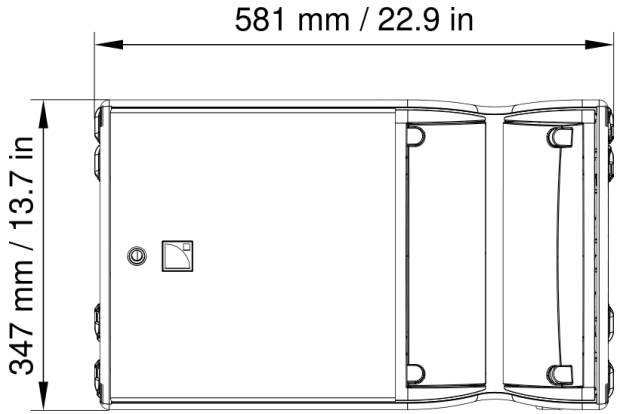

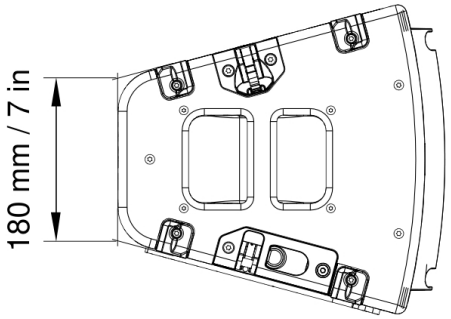

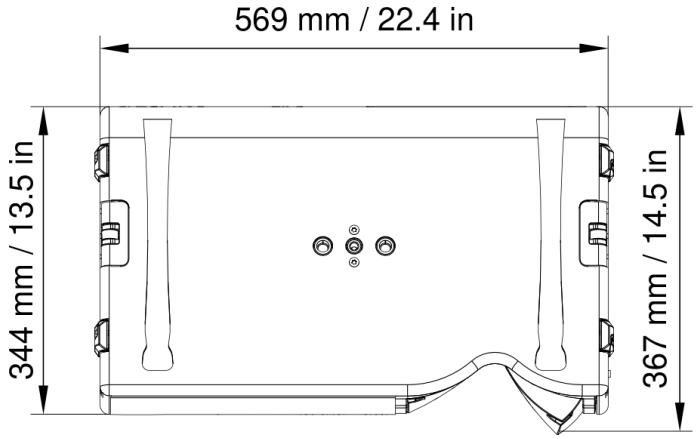

Width	581 mm / 22.9 in
Front height	347 mm / 13.7 in
Rear height	344 mm / 13.5 in
Maximum side height	367 mm / 14.5 in
Net weight	20 kg / 44 lb
Connector format	2 x 4-point speaker connectors
Protection	IP55

All visible numeric data on this page is re-entered as editable PPT text.

The drawing image is the clean official technical visual without document branding.

A10 Wide

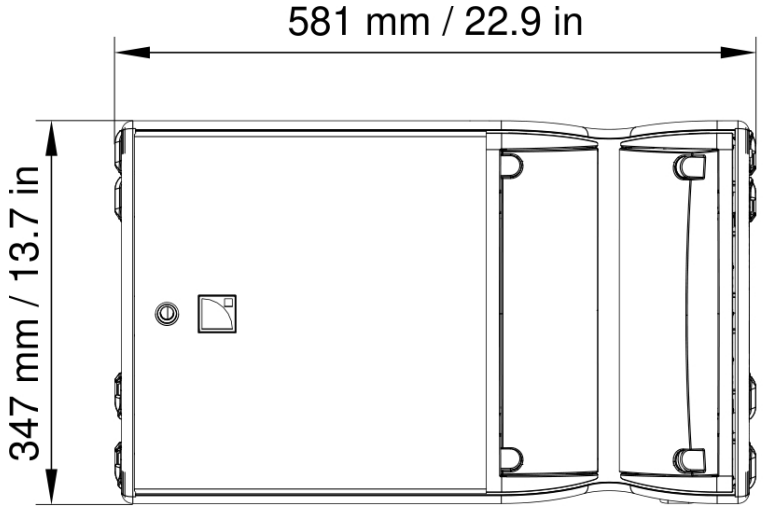
581 mm / 22.9 in
347 mm / 13.7 in

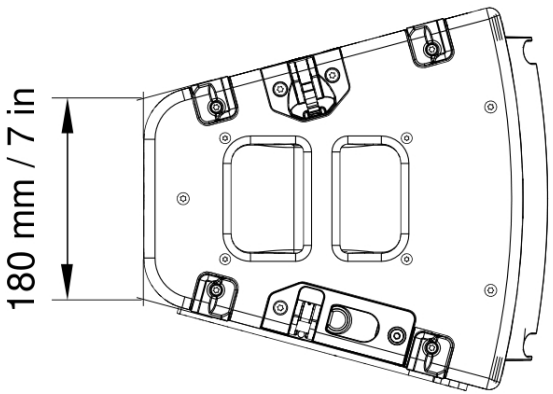
180 mm / 7 in

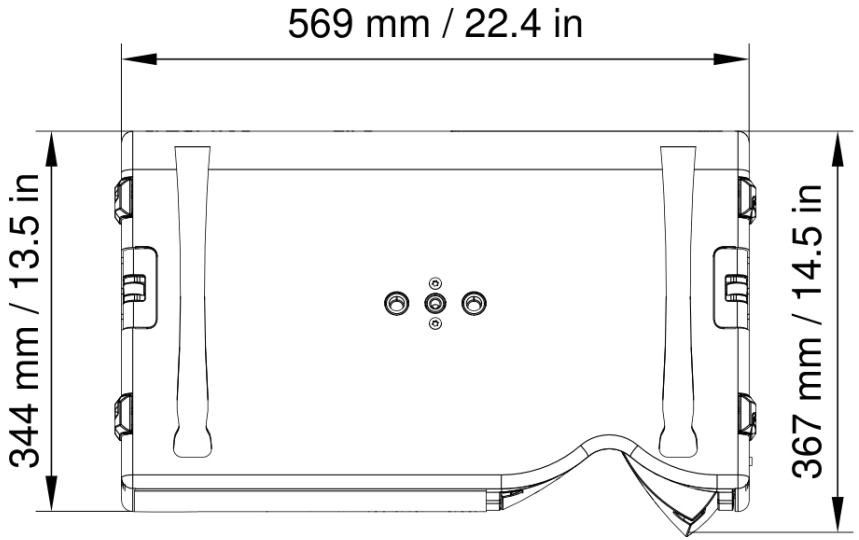
569 mm / 22.4 in
344 mm / 13.5 in
367 mm / 14.5 in

A10 Wide

FLOWN ARRAYS

Designed for vertical line-source arrays with matching flying frames and rigging bars.

STACKED SYSTEMS

Can be stacked or combined with companion enclosures where the project requires scalable coverage.

INDIVIDUAL USE

Can also support front-fill and delay positions when a narrow coverage point-source role is required.

A10 Wide

A10-BUMP

Flying frame

Primary frame for vertical flown arrays.

A10-LIFT

Lift element

Single-point lift element for compact flown systems.

A10-RIGBAR

Rigging bar

Rigging and pullback bar for secure suspension.

A-MOUNT

Mounting plate

Mounting accessory for fixed installation workflows.

A-TILT

Tilt bracket

Angle adjustment bracket for deployment control.

X-BAR

Support bar

Crossbar accessory for structured rigging setups.

CLAMP250

Clamp

Secure attachment to suitable support structures.

SLING 2T

Suspension sling

Load-rated sling for lifting workflows.

A10 Wide

LASER MAGPLATE

Alignment plate

Magnetic laser plate for system aiming.

SP25

Speaker cable

Long speaker cable for system connection.

SP10

Speaker cable

Medium speaker cable for system connection.

SP5

Speaker cable

Short speaker cable for close system links.

SP.7

Speaker cable

Compact link cable for near-field connection.

SP-Y1

Speaker cable adapter

Y adapter cable for supported system wiring.

A10 Wide

Medium Throw Concert Loudspeaker

137 dB
Maximum SPL

67 Hz - 20 kHz
Usable bandwidth

8 ohms
Nominal impedance

20 kg
Net weight

A compact medium-throw system for high-output professional reinforcement.

Wide-angle coverage, scalable deployment and robust installation-ready hardware.