SX218

2 x 18" Passive Direct Radiating Subwoofer

Dual-driver subwoofer platform for touring sound reinforcement and installed sound applications.

Core selling point 01

Dual 18-inch drivers for high output low-frequency performance.

Core selling point 02

Direct radiating reflex design for transient response and low distortion.

Core selling point 03

Tour-grade enclosure with flying inserts and deployment accessories.

Product Positioning

High-output subwoofer for live sound reinforcement and permanent installations.

Official product image

Positioning

SX218 is positioned as a powerful dual-driver subwoofer for small and medium-size touring systems, houses of worship, theatres, ballrooms and corporate AV applications.

Applications

Touring sound reinforcement
Concert halls and theatres
Houses of worship
Corporate AV events

Applications

Stadium and arena installs
Outdoor restaurant and hotel areas
Concourses
Theme parks

Core value

Direct radiating dual 18-inch architecture combines high output, low-frequency extension and minimal distortion in a flexible cabinet format.

Key Performance

Core numerical data from the official technical specifications.

35-150 Hz
Operating range ±3 dB

2000 W
AES rated power

8000 W
Peak power

144 dB
Peak SPL

105 dB
Sensitivity

2 x 8Ω
Impedance

Drivers

2 x 18 in long-excursion drivers with 4 in voice coils.

Connectors

2 x NL4 connectors with dual LF pin mapping.

Amplifier

iKON iK42 system amplifier.

Dimensions

1093 x 537 x 792 mm; 920 mm depth with castors.

Weight

98.5 kg without castors; 102 kg with castors.

Acoustic & Enclosure Design

Dual 18-inch direct radiating architecture with robust cabinet construction.

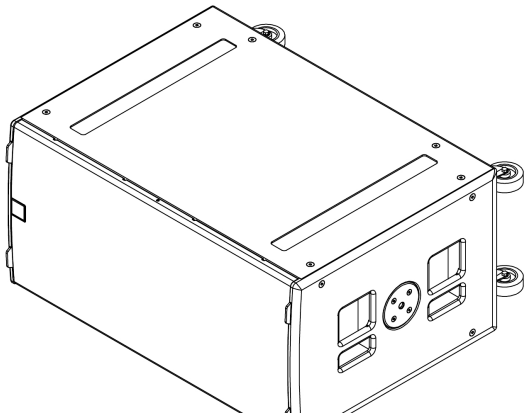

Official technical drawing preview

Acoustic structure

Two reflex-loaded 18-inch low-frequency transducers provide high output, fast transient response and reduced distortion.

Low-noise airflow

Eight reflex ports provide large frontal area to reduce turbulent air noise during high-output operation.

Cabinet construction

Multi-laminate birch / poplar plywood enclosure with skids, mating channels and flying inserts.

Protection

Perforated Zintec grille protects the drivers; optional weatherised kit supports occasional outdoor use.

Hardware summary

Integrated M20 pole mount insert, 24 x M10 mounting points, optional castors, optional transit cover and dedicated flying hardware enable multiple deployment configurations.

Technical Specifications

Editable parameter table based on the official datasheet technical specification.

Product Model	SX218
Type	Dual-driver, direct radiating subwoofer
Drivers	2 x 18 in (460 mm) / 4 in (100 mm) voice coil, long excursion, ferrite magnet, waterproof cone
Frequency Response	35 Hz - 150 Hz ±3 dB; -10 dB @ 30 Hz
Rated Power	2000 W AES
Peak Power	8000 W peak
Sensitivity	105 dB
Maximum SPL	144 dB peak
Nominal Impedance	2 x 8 Ohms
Coverage / Dispersion	Omnidirectional / or cardioid when paired
Enclosure	Multi-laminate birch / poplar plywood
Finish	Textured black or white paint
Protective Grille	Black or white perforated Zintec
Connectors	2 x NL4
Dimensions	1093 mm W x 537 mm H x 792 mm D; 920 mm D including castors
Weight	98.5 kg without castors; 102 kg with castors
Supplied Fittings	Skids, 24 x M10 points, 4 handles, transit cover fittings, M20 pole insert, M8 inserts for optional castors
Recommended Amplifier	iKON iK42 system amplifier; iK41 / iK81 compatibility referenced on product page

System Application / Rigging

Official accessory-based deployment support for installed and live sound systems.

SX218GRIDi - install flying frame

SX218FKIT - flying kit

HTKCT06 - M10 eye bolt

ASF20071 - telescopic pole

Flying grid

Installation flying frame for SX218 / SX218+ arrays, available in black or white.

Flying strips

Set of four strips for flown SX218 / SX218+ installations. Each subwoofer requires one set.

Eye bolt

M10 eye bolt for flying individual loudspeakers. Use only with approved rigging practice.

Pole mount

Wind-up M20 telescopic pole supports suitable top loudspeakers above the subwoofer.

Deployment Options

Practical configuration logic for touring, installation and directional low-frequency use.

01 Ground Stack

Use skids and mating top channels for stable stacked configurations. Optional castors simplify transport.

02 Pole Mount

Use the M20 insert with compatible wind-up telescopic pole for compact satellite systems.

03 Flown Installation

Use approved flying grid, flying kit or M10 eye bolts according to the installation plan.

04 Cardioid Pairing

Omnidirectional single units can be paired for cardioid subwoofer deployment logic.

Typical use: small and medium-size touring systems, fixed venues, houses of worship, restaurants, hotels, concourses and theme parks.

Technical Drawing / Dimensions

Complete official technical drawing rendered at high resolution for readability.

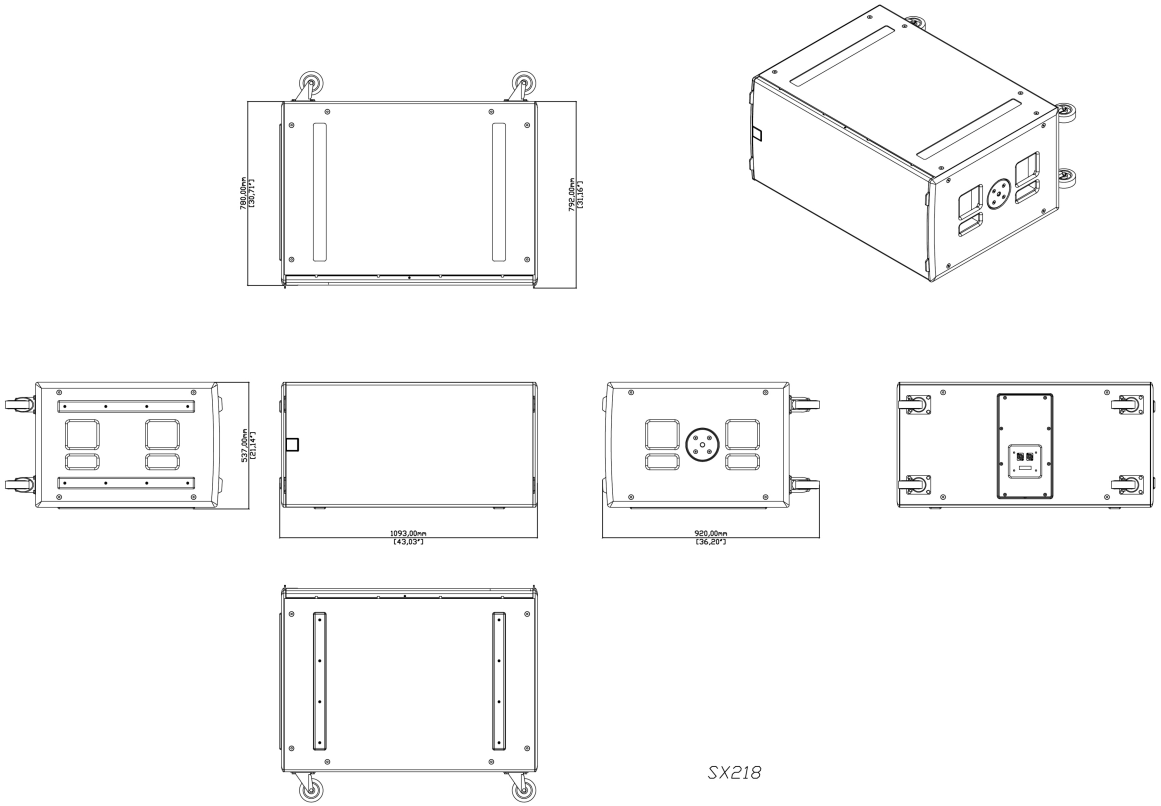

Connections & Hardware Details

Rear connector layout, pin mapping and cabinet hardware overview.

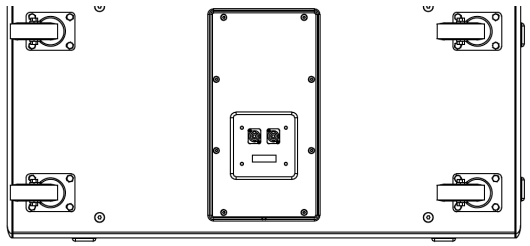

Rear panel / connector view from official drawing

Connectors

2 x NL4 type connectors. Input and link sockets are wired for LF1 and LF2 operation.

Input pins	LF1: 1+, 1- / LF2: 2+, 2-
Link pins	LF1: 1+, 1- / LF2: 2+, 2-
Cabinet fittings	Skids, mating channels, handles and M20 pole mount insert
Rigging points	24 x M10 mounting points
Castor points	16 x M8 inserts for optional castors

Weather protection

Optional WRKIT weatherised connector cover supports occasional outdoor use; permanent outdoor usage requires the designated marine version.

WRKIT

SXTC218

Accessories

Official accessory images and compatibility notes from product page and user guide.

SXTC218

Transit Cover

Protects SX218 / SXP218 during transport.

SX218FKIT

Flying Kit

Set of flying strips for SX218 / SX218+ installation.

SX218GRIDi

Install Flying Frame

Installation flying frame for arrays of up to six units.

WRKIT

Weatherised Connector Cover

Protects NL4 connection and helps weatherise compatible subwoofers.

HTKCT06

M10 Eye Bolt

For flying individual speakers where specified.

ASF20071

Wind-up Telescopic Pole

M20 pole for mounting suitable speakers above subwoofer.

Application Scenarios

Scenario guidance based on official application descriptions; no non-official case images are used.

Touring Sound

Small and medium-size live sound reinforcement requiring strong low-frequency output.

Fixed Venues

Concert halls, theatres, ballrooms and houses of worship.

Stadium & Arena

Sports venues, corporate AV events and concourse areas.

Hospitality & Outdoor

Restaurant, bar and hotel entertainment areas with suitable weather protection.

Theme Parks

Permanent entertainment zones requiring reliable low-frequency reinforcement.

Cardioid Sub Arrays

Paired deployment can support directional low-frequency control.

Official product image

Product Summary

Complete product view, headline specifications and contact-ready area.

2 x 18"
Drivers

35 Hz
Low extension ±3 dB

8000 W
Peak power

144 dB
Peak SPL

Summary

SX218 is a dual-driver, direct radiating subwoofer designed for high-output low-frequency reinforcement in touring and installation environments.

Contact / Project Notes

Prepared for quotation, catalogue presentation and project discussion.