ART 915-A

PROFESSIONAL ACTIVE SPEAKER

A high-output portable loudspeaker with 2100 W Class-D bi-amplification, precision DSP and professional mounting flexibility for demanding sound reinforcement.

131 dB
Maximum SPL

2100 W
Peak amplifier power

15 inch
Low-frequency woofer

ART 9 SERIES

Product Positioning

High-output portable reinforcement for mobile and installed sound

ART 915-A is a self-contained active loudspeaker for live sound, presentations, events, entertainment and fixed installations.

01

High-output reinforcement

A two-channel 2100 W amplifier and 131 dB maximum SPL support intensive audio applications.

02

Fast source connection

Balanced or unbalanced XLR / Jack input, XLR link output and three onboard DSP presets keep setup direct.

03

Install when needed

M10 rigging points, pole mount and dedicated brackets extend the speaker beyond portable use.

MOBILE / INSTALLED

Key Performance

2100 W output, constant directivity and professional transducers

131 dB

Maximum SPL @ 1 m

45 Hz - 20 kHz

Frequency response

100° × 60°

H × V coverage

1800 Hz

Crossover frequency

15-INCH TWO-WAY SYSTEM

1.75” compression driver + 15” woofer

True Resistive Waveguide, FiRPHASE and Bass Motion Control support consistent coverage and low-distortion output.

ACOUSTIC CONTROL

A constant-directivity waveguide keeps the listening area even while the amplifier and DSP preserve headroom.

Acoustic Architecture

Two-way active transducer platform with integrated DSP

1 × 1.75”
Compression driver

1 × 15”
Low-frequency woofer

01 **True Resistive Waveguide**

100° × 60° constant-directivity coverage for the listening area.

02 **FiRPHASE processing**

Linear-phase filtering improves coherence and transient definition.

03 **Bass Motion Control**

DSP-managed low-frequency response keeps output controlled at high level.

Technical Specifications

Core system data at a glance

Model	ART 915-A
System type	Professional active speaker
Frequency response	45 Hz - 20 kHz
Maximum SPL @ 1 m	131 dB
Coverage H × V	100° × 60°
Transducers	1 × 1.75” compression driver / 1 × 15” woofer
Crossover	1800 Hz

Total power	2100 W Peak
High-frequency power	700 W Peak
Low-frequency power	1400 W Peak
Input	Balanced / unbalanced XLR, Jack
Output	XLR link output
Input sensitivity	-2 dBu / +4 dBu
Protections	Thermal, RMS / Soft Limiter

CONTROL	Linear, Boost and Stage presets with level control; convection-cooled Class-D amplification.

Connections & DSP Control

Direct analog workflow with three application presets

REAR CONTROL PANEL

01

Balanced / unbalanced input

Accept XLR or 1/4-inch Jack connections with -2 dBu / +4 dBu input sensitivity.

02

XLR link output

Feed a second loudspeaker or downstream device from the analog signal path.

03

Application presets

Select Linear, Boost or Stage response and set the output level from the rear panel.

FiRPHASE • Bass Motion Control • Soft Limiter

Deployment Options

Portable, pole-mounted, flown or fixed-install configurations

ONE CABINET / MANY POSITIONS

Use the integrated handles for transport, the 35 mm pole mount for portable systems, or M10 points and approved brackets for fixed installation.

01

Portable stand or pole

Pair with AC PRO-FS, AC PMX, AC PRO-PM or PM-KIT M20 accessories.

02

Flown mounting

Use FL-BR ART 915 with the approved rigging configuration.

03

Wall or truss installation

H-BR ART 915 and V-BR ART 915 provide horizontal or vertical mounting options.

Confirm load, fixing method and safety requirements before installation.

Technical Drawing / Dimensions

Complete top, front and side engineering views

TOP VIEW

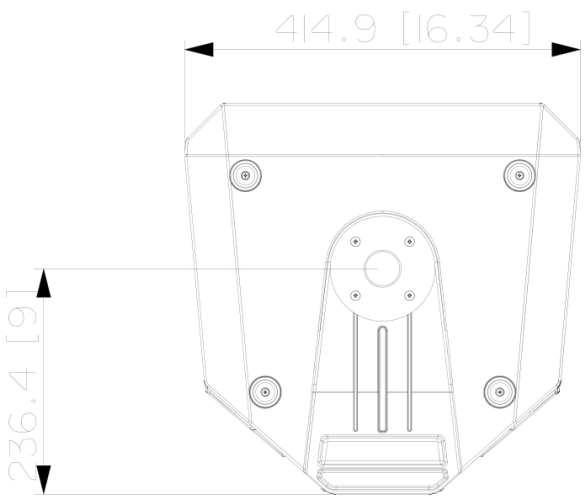

FRONT VIEW

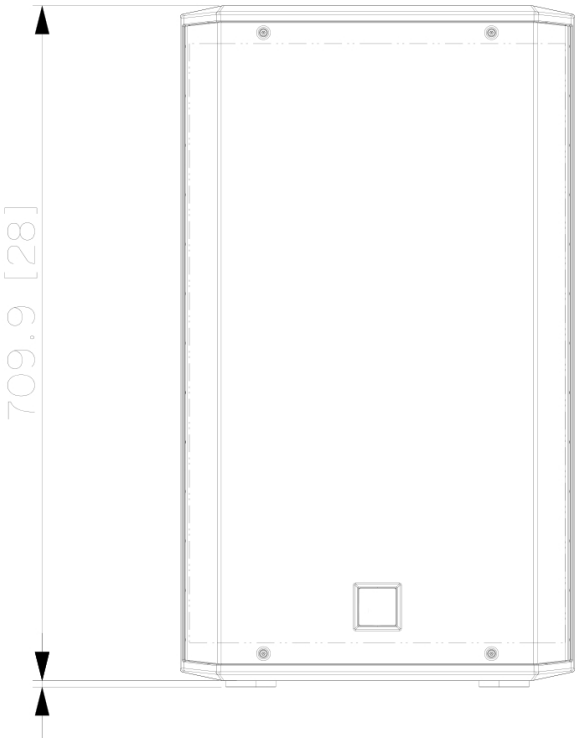

SIDE VIEW

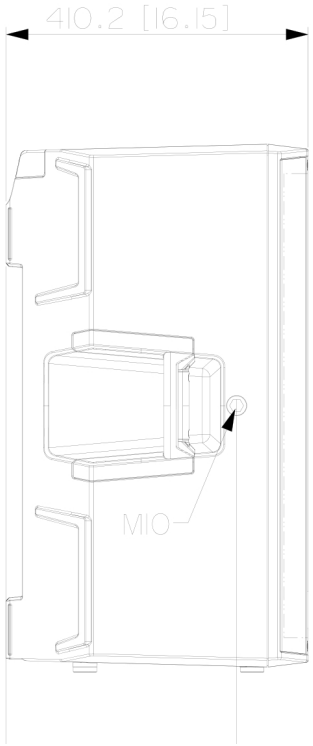

717 mm H	**415 mm W**	**410 mm D**	**22.4 kg**

Technical Drawing / Mounting Geometry

Complete rear, bottom and mounting-detail views

REAR VIEW

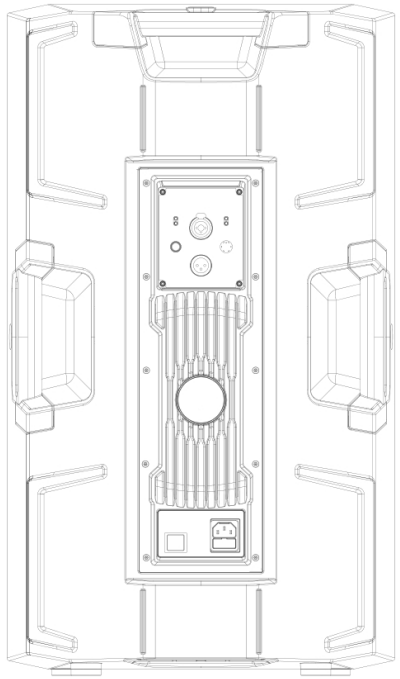

BOTTOM / MONITOR VIEW

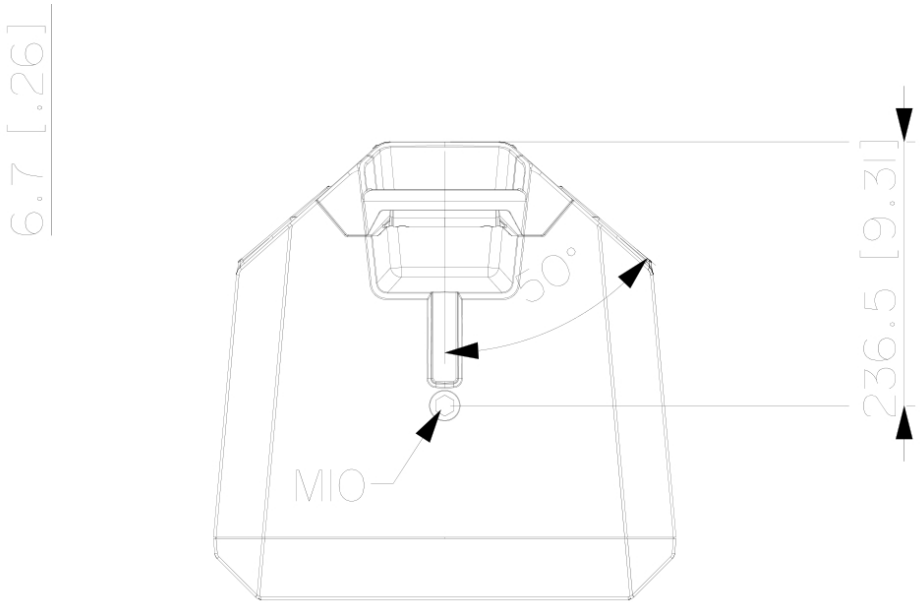

MOUNTING DETAIL

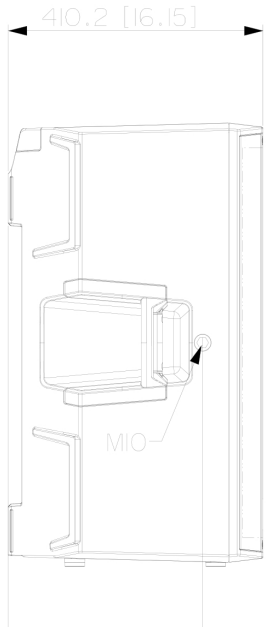

M10

TOP + SIDE POINTS

50°

MONITOR ANGLE

236.5 mm

MOUNTING OFFSET

35 mm

POLE SOCKET

Accessories

Mounting, stand, protection and signal options

13360481

FL-BR ART 915

Flying mount bracket.

13360479

H-BR ART 915

Horizontal mount bracket.

13360480

V-BR ART 915

Vertical mount bracket.

13360232

AC PMX

Speaker pole mount.

13360109

AC PRO-FS

Professional floor stand.

13360067

PM-KIT M20

M20 pole mount kit.

13360110

AC PRO-PM

Pole mount with ring lock.

13360478

CVR ART 915

Protection cover.

13360102

AC XLR 3M3F

Balanced XLR cable kit.

Application Scenario

Live performance, venue reinforcement and event production

LIVE MUSIC VENUE

Consistent coverage for the whole room

High output, wide 100° × 60° coverage and application-specific DSP presets support performers, production teams and venues that need clear, dependable reinforcement.

Pole, flown, wall or truss mounting options let the same cabinet move between portable events and permanent installations.

LIVE MUSIC

Performance and reinforcement

MOBILE EVENT

Fast stand or pole deployment

INSTALLATION

Wall, truss or flown mounting

Safety, Power & Service

Official operating guidance for connection, use, care and fault checks

POWER INPUT

200–240 V / 50 Hz

100–120 V / 60 Hz

FUSE T6.3 A L 250 V

Fuse carrier: rear panel, directly beside the standard 3-prong IEC AC inlet.

Voltage conversion and fuse replacement must be performed by qualified service personnel.

01 Safety

Match the rating-plate voltage, use protective earth and keep liquids away. Disconnect power if smoke, impact or cable damage occurs.

02 Connection

Use the balanced XLR / Jack input and XLR link output. Connect IEC power only after checking all signal and power connections.

03 Operation

Start with volume at minimum. Power the mixer first, the speaker last; switch the speaker off first after use. Select Linear, Boost or Stage.

04 Maintenance

Power off before cleaning. Use a dry cloth only; avoid solvents and abrasives. Keep covered outdoors and warm cold voice coils at low level for 15 minutes.

05 Troubleshooting

No power: check AC, switch and cable. No sound: check source and signal cable. Distortion: reduce mixer level. Hum: check grounding.

06 Technical Data

45 Hz–20 kHz; 131 dB maximum SPL; 100° × 60° coverage; 2100 W Peak; 15-inch woofer; 1.75-inch compression driver.

Product Summary

ART 915-A brings power, acoustic control and deployment flexibility together

ART 915-A

PROFESSIONAL ACTIVE SPEAKER

131 dB
Maximum SPL

2100 W
Peak power

45 Hz
Low-frequency limit

100° × 60°
Coverage

Portable systems, live events, presentations, venues and fixed installations